LK Water meter Cabinet UNI

Design

The cabinet is designed to be built into a wall with an incoming cold water supply in the underside of the cabinet. Minimum joist depth when mounting is 120 mm. The cabinet can be supplemented with a frame/hatch. The cabinet must be installed in accordance with the industry regulations *Säker Vatteninstallation (safe water installation).*

LK Water Meter Cabinet UNI is supplied with:
- Screws and gasket for cabinet installation,
- Brackets,
- Red plug for M8 hole in back,
- LK Sealing Plug Black,
- Knock-out holes for cables,
- Bellow sleeve for drainage,
- V2 Drainage elbow with outlet plate and screw,
- Splash protection,
- Protective bag to use during installation,
- Assembly instructions.

- Included in some models:
- LK Manifold UNI for cold water and hot water,
- LK Ball Valve 703 R, Angle,
- LK Water Meter Bracket Package,
- LK Check Valve VM,
- LK Connection Couplings AX16xG15,
- LK Connection Coupling AX20 for supply to and from water heater,
- LK CubicSecure smart water safety unit.

The cabinet is assembled in accordance with the below instruction The requisite number of pipe inlets for both feed and branch pipes are pre-assembled in certain models. LK Press Connection AX16xG15 for branch pipes is included and is only hand-tight in certain models.

The LK PE-X Pipe-in-Pipe system, with component parts as stated in installation solutions NT VVS 129, is tested and approved in accordance with NT VVS 129 and the Sintef test method for conduits. Read more at: www.lksystems.se/en/ (Technical documentation/ Assembly Instructions/Universal).

Example LK Water Meter Cabinet UNI 8/6 CS and LK Water Meter Cabinet UNI/UNI XL.

The cabinet is tested according to SP method 5676.

BRANSCHREGLER SÄKER VATTENINSTALLATION

Accepterad
monteringsanvisning
2021:1

RI. SE KONTROLL
TG nr: C901070 1002

TABLE OF CONTENTS

Design	1
Scope of Delivery	2
Water meter Bracket	3
Water Safety System CubicSecure	3
Installation Requirements	3
Working Procedure	4
Installation Aids	7
Replacement of Pipes	8
Mounting the CubicSecure	8
Dimension Drawings	8

Scope of delivery

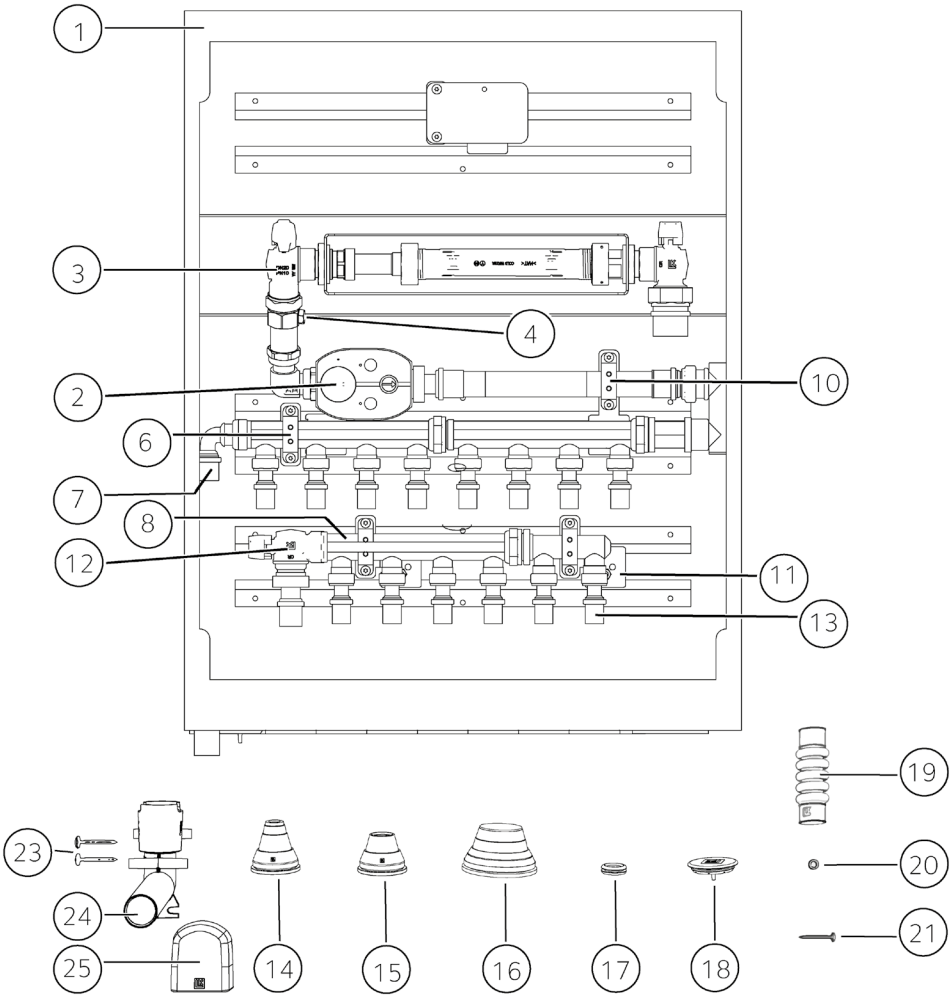

Items 1 - 16 are prefitted in the cabinet with the necessary couplings, spacers, plugs, etc.

No.	Designation	Quantity	Art. no.
1	Manifold Cabinet VM	1 pc.	188 23 99
2	Water safety Unit LK CubicSecure (incl. in some models)	1 pc.	188 26 67
3	Water meter bracket package	1 pc.	464 81 13
4	Check valve VM	1 pc.	464 00 00
6	Manifold UNI or Manifold UNI-Avst with Compression fitting AX16		187 06 88, 187 06 90, 187 06 91, 187 58 93, 187 58 94 187 82 17, 187 66 08
7	PressPex Angle AX20	1 pc.	187 65 38
8	Manifold UNI or Manifold UNI-Avst with Compression fitting AX16		187 06 88, 187 06 90, 187 06 91, 187 58 93, 187 58 94 187 82 17, 187 66 08
10	Manifold bracket		188 22 04
11	Manifold bracket		188 22 05
12	Angle valve 703 Red with Press Pex AX20	1 pc.	481 00 38, 187 66 07
13	PressPex Straight AX16	1 pc.	187 65 08
14	Pipe inlet 20-25 LP	1 pc.	188 27 23
15	Pipe inlet for conduit 25 LP	14 pcs.	188 27 22
16	Pipe inlet 32-50	1-2 pcs.	188 25 55

Supplied with the product - supplied loose in the cabinet

No.	Designation	Quantity	Art. no.
17	Cable grommet	5 pcs.	33952
18	Sealing plug, black 40 LP		188 27 21
19	Bellow sleeve 25 LP	1 pc.	188 27 42
20	Seal for wood screw	4 pcs.	29490
21	Wood screw (5 x 35 mm)	4 pcs.	29489
23	Installation screw, drainage elbow (4.2 x 65 mm)	2 pcs.	incl. in package 188 21 43
24	Drainage elbow	1 pc.	incl. in package 188 21 43
25	Outlet plate, white	1 pc.	188 21 44
	Protective bag	1 pc.	
	Splash protection	1 pc.	188 24 08, 188 24 07

Water meter bracket Package

Water meter bracket with water meter fitting designed for water meters with construction length 190-220. Ball valve for isolating both water meter sides. The fitting parts are made of dezincification-resistant brass. Spacer included. For water meter size 3-5 m^3. Connection incoming cold water supply external G25.

Towards the water meter bracket LK Check Valve VM is prefitted with back flow prevention of type EA according to EN 1717.

Water Safety System CubicSecure

LK CubicSecure is a water safety system that protects against leakage by continuously measuring water consumption, water pressure and temperature. The unit emits alarms for both micro-leaks and larger leaks. When the water safety system detects a leak, it automatically shuts off the water flow. The water safety system is equipped with a switch for manual shut-off in the event of power failure or emergency. With the LK app and Wi-Fi connectivity, you can remotely control the unit to shut the water off or on, acknowledge alarms and monitor your water consumption, for example.

Installation requirements

Electrical protective equalization

OBS!
If electrical devices are to be mounted in installation cabinets where metal pipes, e.g. copper pipes, are drawn in and out, the metal pipes must be provided with an electrical protective equalization.

A qualified electrician must ensure that electrical protective equalization is ensured.

Manifold location

Manifolds in manifold cabinets for tap water must be installed at a lower level than the outlets they serve. If this is not possible, a seal must be established between the conduit and the media pipe at the outlet, e.g. in the case of a kitchen connection.

Wall installation

For assembly in a stud wall, a stud-frame thickness of min. 120 mm is required.

Installation in room with seal layer on wall with LK Bathroom Hatch PRESEAL

When the cabinet is installed with its opening into a room with a wall seal layer, the LK Bathroom Hatch PRESEAL must be used. The front edge of the cabinet must be positioned min. 65 mm from the outside of the finished wall. See separate assembly instructions.

NOTE!
Installation with LK Hatch HIDDEN.
This product requires more wall space.
See product assembly instructions.

NOTE!
A service opening must not be placed where there is a bath or shower.

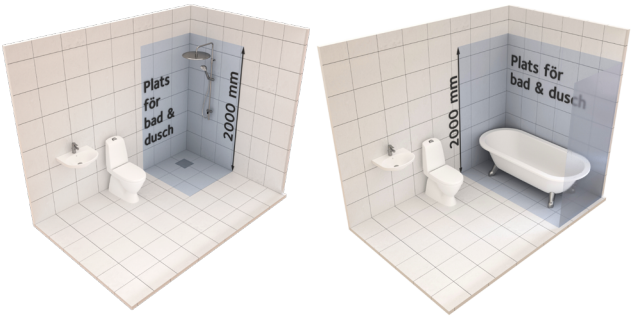

No service opening may be in place for bath and shower Service openings must be accessible where there is a bath or shower.

Placement

The cabinet must not be moved from its original position more than +/- 20 mm in relation to the pipe installation.

Installation height when installed on a stud wall

The design of the installation must enable perpendicular pipe penetration in relation to the cabinet bottom. The cabinet should be mounted at least 250 mm above the floor so that the drainage pipe can be laid with a drop along its entire length. To facilitate perpendicular fixing, LK Fixing Plate PIP 25 can be mounted 50-150 mm below the cabinet. The water meter must be placed between 700 and 1000 mm above the finished floor.

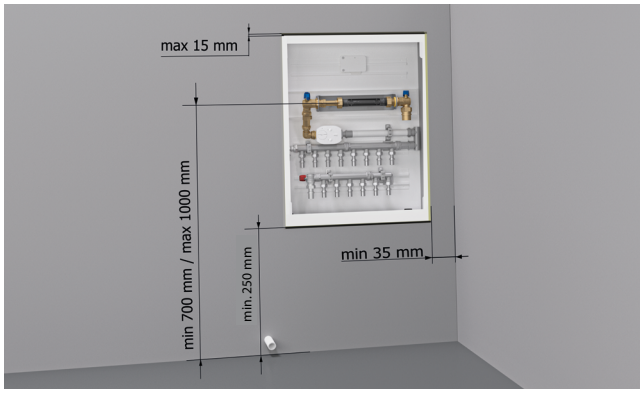

Stud wall construction. Note! Wallboard shall be cut edge to edge towards the manifold cabinet.

Installation close to wall

When installing the cabinet close to a stud wall, a gap of at least 35 mm must be provided from the outside of the cabinet to the connecting wall so that there is room for LK Frame/hatch UNI INB.

Working procedure

1 - Prepare pipe inlets

Prepare LK Pipe Inlet UNI and LK Pipe Inlet 32-50 for feeding pipes by adapting/cutting the inlets to the correct dimensions, see table. Refit them in the cabinet, taking care with installation to ensure that the cabinet base is sealed. LK Pipe Inlet 25 conduit is prefitted for the coupling pipes in certain models.

Cutting of a LK pipe inlet LP 20-25 mm. Cutting of a 16mm LK Pipe Inlet inlet.

Cutting of a 32-50 mm LK Pipe Inlet.Used forspecially ordered shaft bottom.

Cutting level	Dim. Pipes	Dim. Conduit (PiP)
1	Ø16	–
2	Ø20	–
3	Ø25	Ø25
4	Ø32	Ø34
5	Ø40	–
6	Ø50	–

Cutting instructions table.

NOTE!
If the pipe dimension seal is damaged during cutting, this must be replaced with a new one.

2 - Mount the cabinet to the wall

he design of the installation must enable perpendicular pipe penetration in relation to the cabinet bottom. The cabinet should be mounted at least 250 mm above the floor so that the drainage pipe can be laid with a drop along its entire length. The water meter must be placed between 700 and 1000 mm above the finished floor. Fix the manifold cabinet to the building frame through the holes in the sides or back. For wooden rule construction, use the attached screw and sealing washer. When the attachment is complete, seal unused holes in the cabinet. Alternatively, the cabinet can be fixed with LK Legs for Manifold Cabinet UNI/GV or LK Flexistand. See under ***Installation aids***.

Position the cabinet correctly in terms of depth so there is space for any pipe insulation. NOTE! The cabinet should never be installed further out than edge to edge with the stud-frame, so that the Frame/hatch INB can be installed.

If the cabinet is placed on an outer wall, it should be installed on the warm side of the construction, inside the airtight foil.

Attaching a cabinet to a stud wall.

3 - Pipe connection

The cold water supply with protective piping is run through the pipe inlet at the bottom of the cabinet to where the left-hand side or on the right-hand side depending on cabinet model. An LK End Protection is fitted to drain off any leakage water to the bottom of the cabinet. Ordered separately.

A fitted LK End Protection RiR article no. 481 00 00.

Water is supplied from the cold water manifold to a water heater and then returned to the hot water manifold via the ball valve. Pipe and conduit are then drawn up through the pipe inlet. The conduit is drawn in approx. 60 mm above the bottom of the cabinet. This step can be made easier if the pipe is lubricated with soapy water or similar. Cut and deburr the pipe and connect it to the manifold according to the assembly instructions for each type of coupling.

Tighten the couplings on the manifold in the LK Prefab Cabinet. Check that the O-ring in the pipe inlet - if one is fitted - is located in a dip in the corrected conduit. It is important for the pipes to enter the cabinet straight up so as to ensure the base is sealed. Then secure the conduits using LK Fixing Plate or in some other way to ensure the pipe rise is straight.

The LK Conduit Umbrella LP or an equivalent solution **should** be installed on RiR coupling pipes for tap water and heating systems so that any leakage will be guided to the bottom of the shaft. In cases where the tap point's empty pipe termination is at a lower level than that in the manifold cabinet, it can be sealed between the empty pipe and the media pipe at the tap point with e.g. LK End Protection RiR. During input with RiR the LK Sealing Socket must be adapted in dimension and used as an umbrella or equivalent solution. The LK Conduit Umbrella should be installed on the media pipe and pressed down towards the conduit.

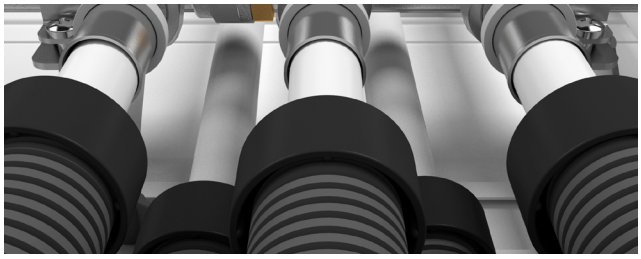

Assembly of LK Conduit Umbrella LP.

4 - Pressure and tightness check

Pressure and tightness check should be carried out according to *"Assembly instructions for LK PE-X, PAL and PE-RT pipes"* or according to industry regulations on *"Säker vatteninstallation" (Safe water installation)*.

NOTE!
A pressure and tightness check should be carried out before the wall covering is to be installed.

5 - Installation of cabinet drainage

Drainage outlets from a cabinet with tap water installation must always drain onto an area with a waterproof flooring. Drainage outlets from cabinets in heating system installations can run off from the wall surface under the cabinet in rooms normally in use to detect any leakage. For pipe lead-throughs in walls, the distance between the pipe and the adjacent wall or the floor's sealing layer must be at least 60 mm. Leakage indication sensors must not be fitted in bathrooms or shower areas.

There are several ways to install the drainage elbow:

5A - Drainage elbow directly joined to the cabinet's outlet drainage

Drainage from the wall surface under the cabinet. Connect the drainage elbow directly to the cabinet's outlet pipe after all pipe inlets and sealing plugs have been installed.

Affix the drainage elbow to a wall stud in a suitable position. Insert the two installation screws supplied in any of the fixing holes.

For cabinets mounted externally on the wall, the drainage elbow opens out into the pre-drilled hole in the base.

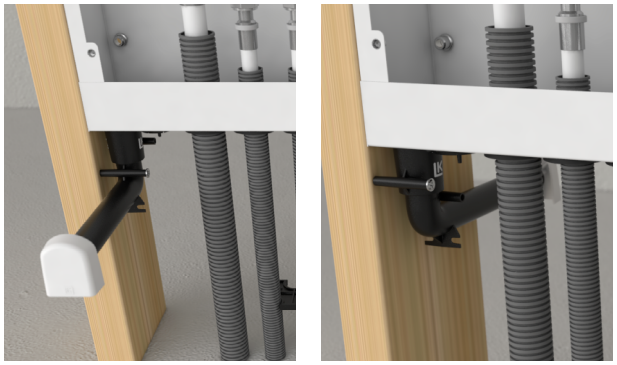

A drainage elbow directly connected to the cabinet's outlet pipe will drain into the same room as the cabinet's service hatch or, alternatively, the room behind.

5B - Drainage elbow connected via conduit

Connect the conduit to the cabinet's drainage pipe using the bellow sleeve. The bellow sleeve must not be deformed in a manner that prevents the flow of any water leaks. Connect the drainage elbow to the conduit. Note that the pipe should rest in the drainage elbow at a depth of approximately 20 mm. Affix the drainage elbow to a wall stud in a suitable position. Insert the two installation screws supplied in any of the fixing holes. Ensure that the entire conduit is installed with a fall in its entire length towards the outlet and that the conduit is secured.

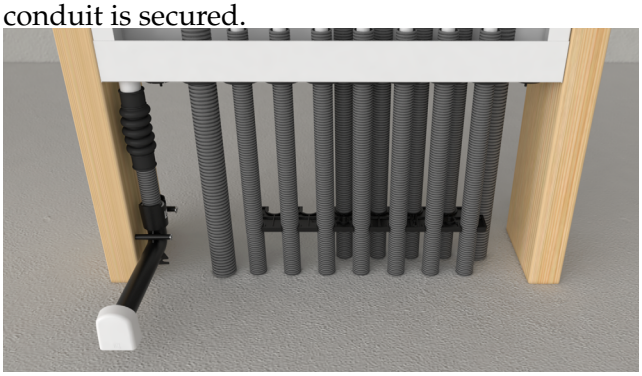

Drainage elbow connected via a conduit.

5C - Connection of drainage pipes

It is possible to connect drainage pipes from two cabinets. The illustration below shows side-by-side installation but drainage pipes can also be connected when the cabinets are mounted further apart. Use LK Drainage Kit 25 Duo. Affix the drainage elbow to a wall stud in a suitable position. Insert the two installation screws supplied in any of the fixing holes. Ensure that the entire conduit is installed with a fall in its entire length towards the outlet and that the conduit is secured.

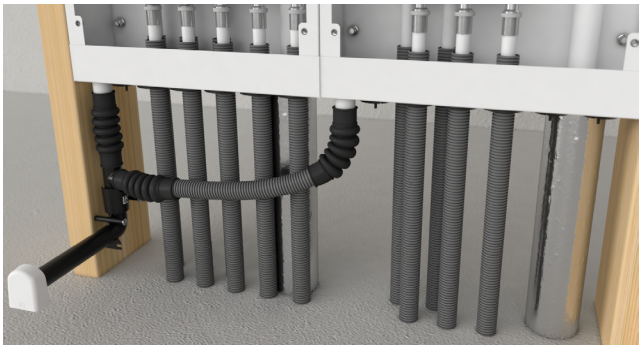

Connection of drainage pipes

6 - Installation of outlet plate

Install a wall panel with a hole for the drainage elbow's outlet pipe. Hole diameter approx. 26 mm. Connect any sealing layer as per the instructions of the supplier of the sealing layer. Although LK Systems can supply the LK Pipe Membrane, the sealing contractor should carry out the installation and be responsible for the waterproofing characteristics of the sealing layer in accordance with industry regulations issued by the *Swedish Ceramic Tile Council (BBV), Swedish Flooring Trade Association Wet Room Control (GVK) or the Swedish Painting Industry Wet Room Control (MVK).*

Once the wall panelling is installed, the drainage elbow should be cut to size using the LK Pipe Mill V2. Alternatively, the drainage elbow can be cut to a suitable length using a tool such as a hacksaw blade. Be careful not to damage the surface layer, leave 2-3 mm of the outlet pipe outside the wall surface and leave 6-9 mm in rooms with a wall sealing layer.

Install the LK Outlet Plate V2 in the outlet pipe. For a more luxurious finish, the LK Outlet Plate V2 Chrome is available as an accessory.

Installation of the LK Outlet Plate V2.

7 - Installation of splash protection

Install the spray guards supplied. Take care to ensure that the guards protrude at the side so that the entire width of the cabinet is covered by the guards. Should be fitted during the construction period in order to prevent dirt and dust getting into the cabinet. The splash protection is what makes the cabinet safe from water damage, and it must always be mounted.

8 - Installation of frame/hatch

When the cabinet is built into the wall, LK can offer several different solutions for the frame and hatch. See the product range on LK's website, www.lksystems.se.
For example, LK Frame/hatch UNI INB, which has a flared frame to cover the holes around the cabinet, can be used. The frame covers an area 15 mm beyond the edges of the cabinet.

Fit LK Frame/hatch with the screws supplied. If the cabinet is installed as far into the wall that the screws provided do not suffice, these can be replaced with longer M5 screws (not in the LK standard range) On delivery the hatch is equipped with a screwdriver lock and an LK Key Lock is available as an accessory.

LK Frame/hatch UNI INB.

In environments with intensive water exposure and/or chemicals, e.g. animal stables, baths or washing locations, LK offers specially made frames/hatches with greater resistance to corrosion. Contact LK for more information.

Installation aids

Installation using LK Cabinet Stand L2

The back of the cabinet is provided with four attachment points (M8 nuts) which can be used if you wish to install the cabinet before the concrete base is cast. LK Cabinet Stand L2, which is installed as shown below, is available as an aid.

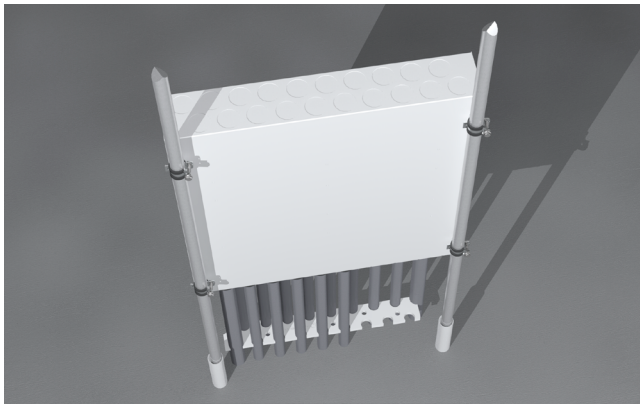

LK Cabinet Stand L2 fitted along with LK Fixing Plate RiR 25.

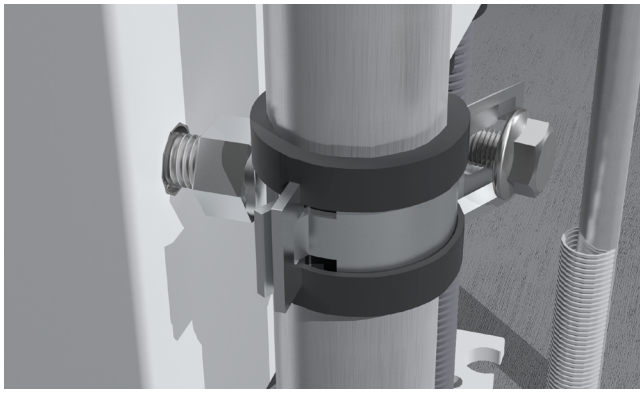

Close-up of attachment to cabinet.

Insert the four M8 bolts supplied in the back of the cabinet. Screw the pipe clamps on to the protruding bolts. Thread in the round bars and slip on the conduit parts supplied with the stand. The conduit prevents the stand from getting stuck, and as a consequence the stand is reversible. Push the round bars through the insulation and down into the sand until the installation feels steady. Raise the cabinet up to a suitable height and tighten the clamps. Tape the conduits to the stand legs to prevent the conduits from rising during casting.

Mounting using the LK Leg Stand and LK Flexilegs

The LK Leg Stand and LK Flexilegs simplify cabinet assembly on prefabricated concrete joists. Manufactured from galvanised steel plate. LK Leg Stand is supplied in pairs with 4 self-tapping screws to fix to the manifold cabinet. LK Flexilegs are supplied in pairs with 2 tapping screws to fix to the back of the manifold cabinet. Do not screw the legs into the cabinet at less than 50 mm from the bottom, seal any surplus holes. The feet have 6 mm holes for fixation to the concrete floor structure. The legs are fixated using a bolt or metal nail plug (not supplied).
In cases where the manifold cabinet is not adequately secured by the leg stand, then the cabinet should also be secured to the wall.

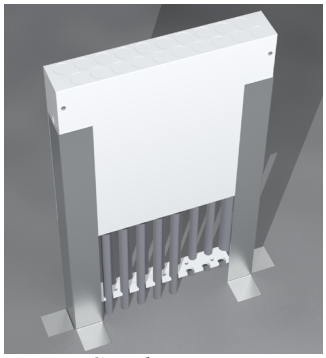

LK Leg Stand

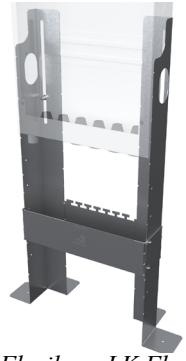

LK Flexilegs, LK Flexiguard

Replacement of pipes

Fit lock plate on the conduit just above LK Pipe Inlet 25 when replacing the pipe. LK Lock Plate is ordered separately. LK PE-X Universal Pipe X16 can only be replaced starting from the angle wall bracket.

Other products

For more information on products included in the LK Universal Standard Range, see:
www.lksystems.se (Products/Universal)

Mounting the Cubicscure

For some cabinet models LK CubicSecure is prefitted in the cabinet at the time of delivery. If not, follow the instructions in the assembly instructions included with CubicSecure.

NOTE!
Install CubicSecure after any feed to a safety system that requires water.

Dimension drawings

LK Water Meter Cabinet UNI

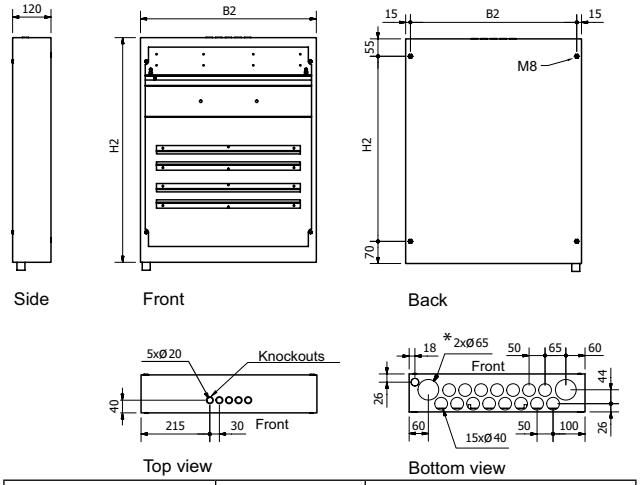

Article no.	B2	H2
188 23 99	550 mm	710 mm
188 26 79*	550 mm	710 mm
188 26 80*	550 mm	710 mm
188 23 05*	550 mm	710 mm
188 23 06*	550 mm	710 mm
188 23 03	550 mm	550 mm
188 23 04	550 mm	550 mm
188 26 89	800 mm	710 mm

** These models only have one 65 mm hole on the underside of the cabinet.*

LK Frame/ Hatch UNI WM-Cabinet

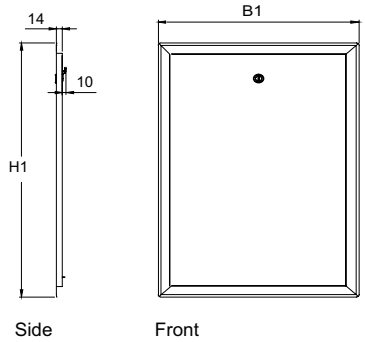

Article no.	B1	H1
243 46 80	590 mm	740 mm
188 13 05	590 mm	580 mm
234 46 79	800 mm	710 mm