LK Frame/hatch UFH, UTV

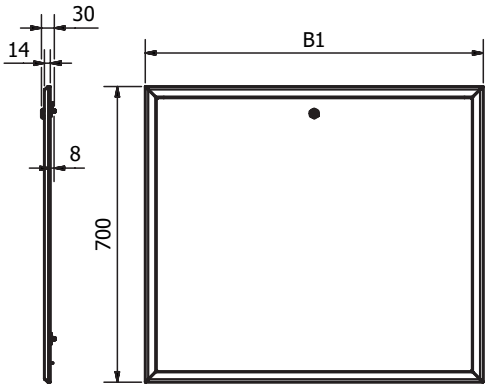

LK Frame/hatch UFH, INB

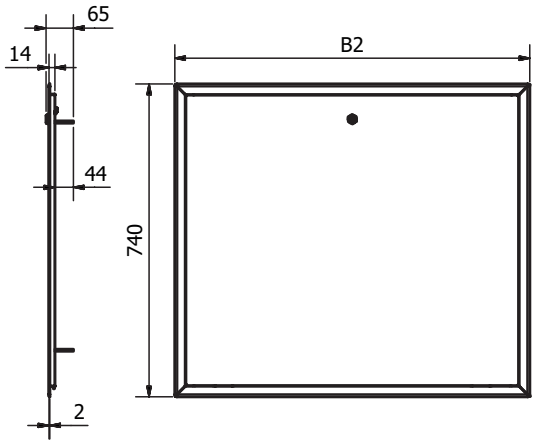

LK Shunt Cabinet VS2

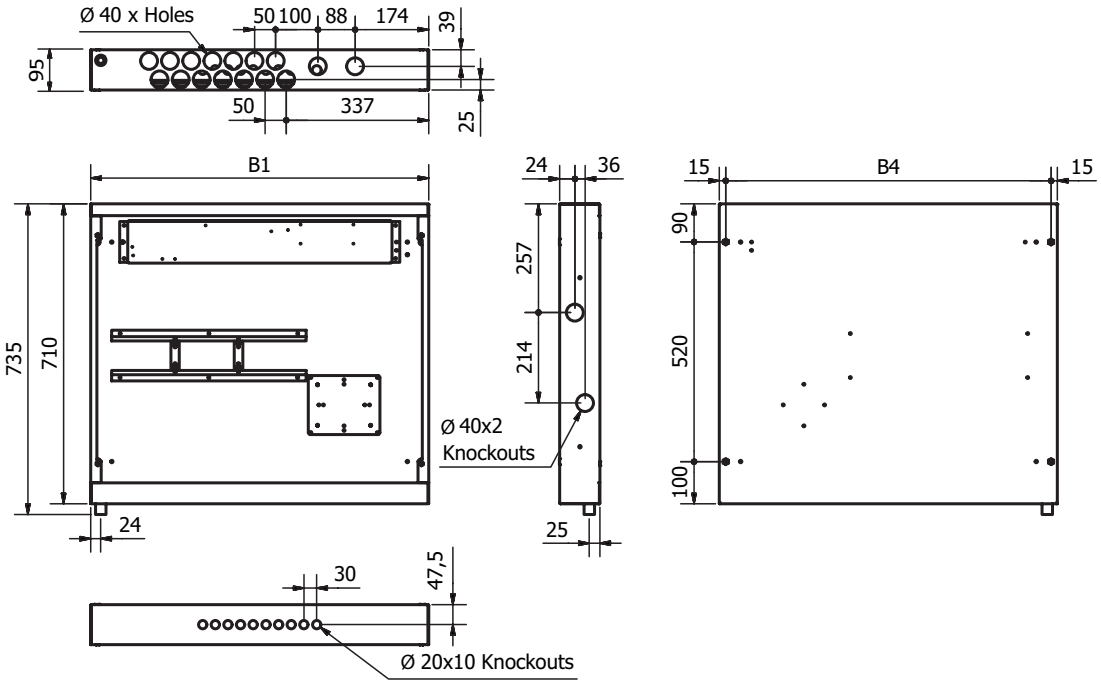

LK Base

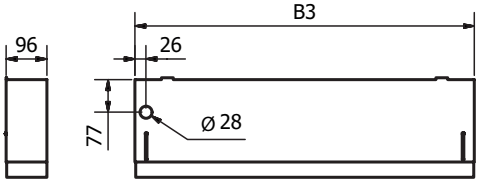

Cabinet type	B1 mm	B2 mm	B3 mm	No. of holes	B4 mm
800	800	840	803	14 + 2	770
1050	1050	1090	1053	24 + 2	1020